SALES FORMAT

RoHS

REV	DESCRIPTION	MODIFICATION	DATE
A/0	新制定		05.06.21
A/1	變更一	物料編碼變更	06.05.05

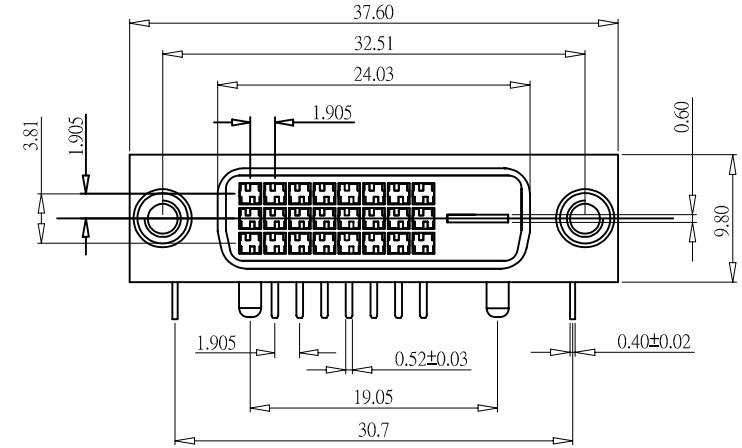

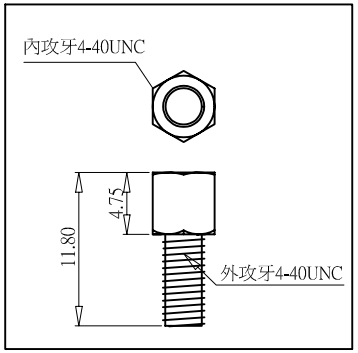

*MATERIAL
BODY： PBT30% UL 94V-0 RATED, COLOR: WHITE
LATCH：PA66+30% UL 94V-0 RATED,COLOR:WHITE
CONTACTS：BRASS T=0.25
CONTACT PLATING： GOLD PLATING OVER NICKEL ON CONTACT AREA TIN PLATING ON TERMINAL
SHELL: SPCC T=0.50
SHELL PLATING: PLATING NICKEL 80U"MIN OVER 40U" MIN COPPER RENDER ON SHELL

*MECHANICAL
MATING FORCE：4.5 KG MAX. @ 25 MM/MINUTE
UNMATING FORCE: 1.0 KG MIN. AND 4.0 KG MAX. @25 MM/MINUTE
DURABILITY: 100 MATING CYCLES

*ELECTRICAL SPECFICATION
INSULATION RESISTANCE：1000 MEGOHMS MIN
DIELECTRIC WITHSTANDING VOLTAGE：500 V DC RMS ±50 V.60 HZ
CURRENT RATING: 1.5 AMPERES MIN
SHELL RESISTANCE: 50 MILIOHMS MAX.INITIAL; 50 MILIOHMS MAX.CHANGE FROM INITAL
CONTOCT RESISTANCE： 20 MILLOHMS MAX.

*ENVIRONMENTAL
OPERRATING TEMPERATURE： -20°TO85°

*HOW TO ORDER

PART NUMBER：

DF 240 R 1－1 1 2 01 B2

- DF: DVI板端母頭
- 240: PIN數 24+1
- R: R：90度
- 1: "1"普通一般鐵殼
- 1: "0":普通板前鐵殼(SPCC) "1":普通板鋅合金前殼
- 1: "1":鍍全鎳 "3":鍍全鍍金1U"
- 2: "2":主PBT+後PA66米色 "4":主PBT+後PA66黑色
- 01: 01-1U
- B2: 省略：爲沒有螺絲 A*爲鎖螺絲 B*爲附螺絲 "*":螺絲規格 1-(5.8*13.0) 2-(4.75*11.8) 3-(5.8*9.5) 4-(4.75*8.5)

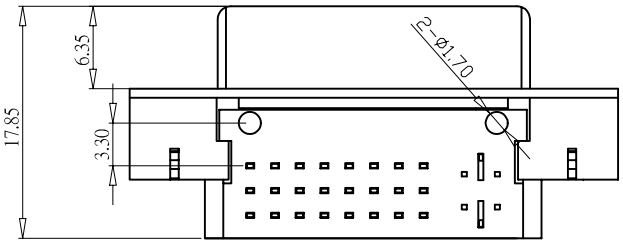

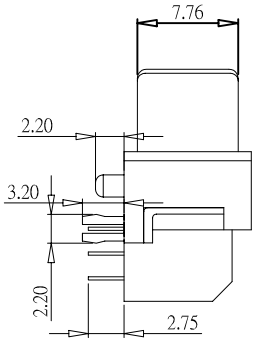

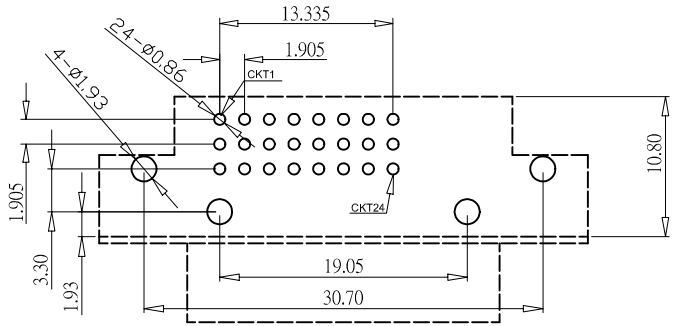

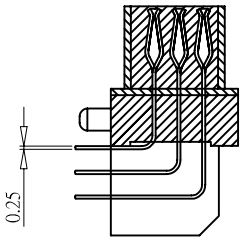

P.C.B LAYOUT

未標示公差尺寸值 METRIC .0=±0.35 .00=±0.25 .000=±0.15	TITLE:	DVI(24+0)F90度附4.75*11.80		DRAWN BY	FAN SHA
				CHECKED	
	PRODUCT NO:	DF240R1-11201B2		APPROVED	
	FILE NO:	ZK-3-D-001		DRAW NO	COSJ-061
	SCALE	1:1	REV A/0	UNIT	mm