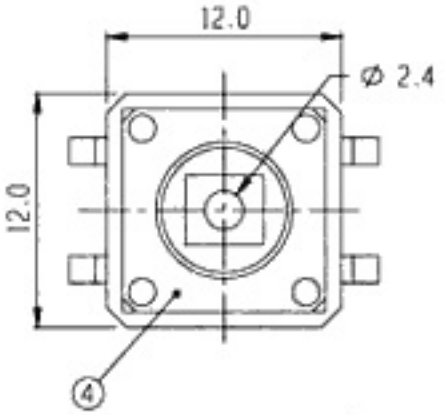

RoHS Compliance

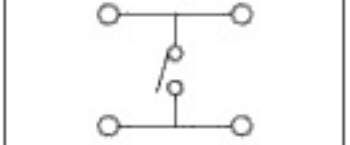

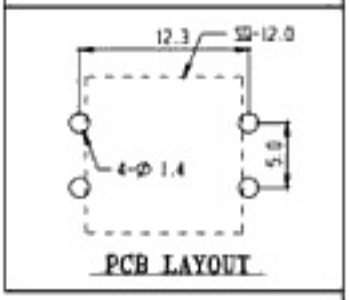

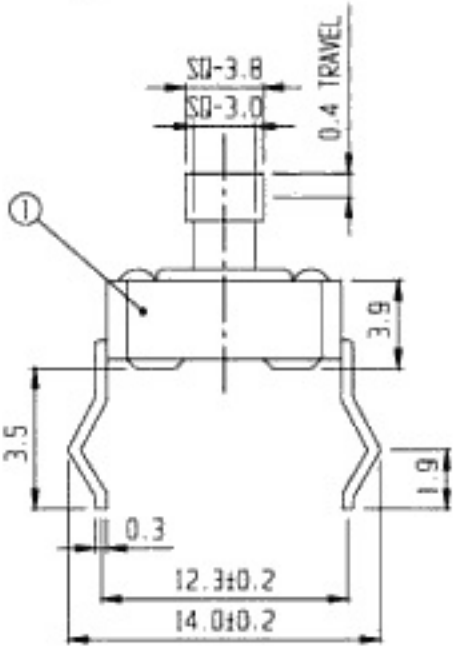

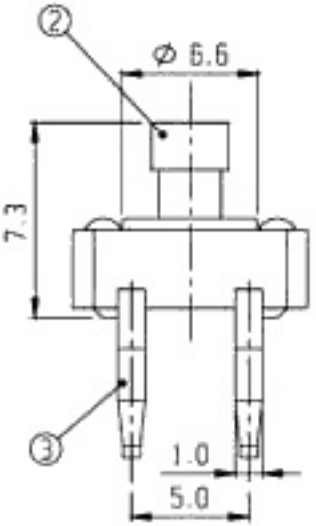

NO	PART	MATERIAL	QTY	REMARKS	NO	PART	MATERIAL	QTY	REMARKS
5	CONTACT	P B S	1	Ag PLATED					
3	TERMINAL	BRASS	4	Ag PLATED	4	COVER BOARD	POLYESTER FILM	1	
1	FRAME	NYLON	1		2	KNOB	NYLON	1	

ISSUED	SPECIFICATION	TITLE: TACT SWITCH			
	RATING: DC 12V 50mA	MODEL NO: TC-00122-00			
	CONTACT RESISTANCE: 100mΩ Max.				
	INSULATION RESISTANCE: 100MΩ at 500V DC	TOLERANCE	UNIT: MM	DWN.	
	WITHSTAND VOLTAGE: AC 250V for 1 minute.	UP TO 1.0:±0.1	SCALE: 4:1	CHK'D.	
	OPERATION FORCE: REFER ATTACH SPECIFICATION	1.0 TO 10.0:±0.2	VERSION: 01	APPD.	
	SWITCHING LIFE: 100k Cycles Min.	OVER 10.0:±0.3	DRWG NO:		