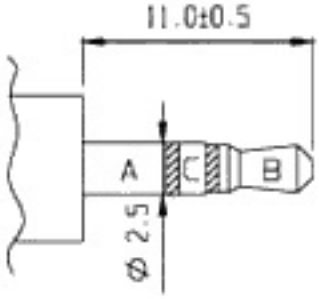

MATING PLUG

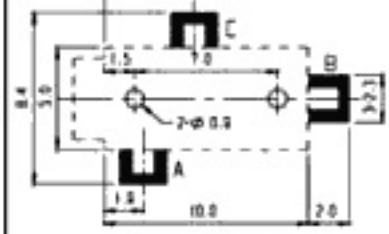

P.C.B.LAYOUT

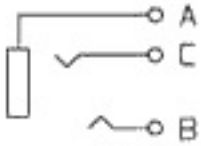

SCHEMATIC

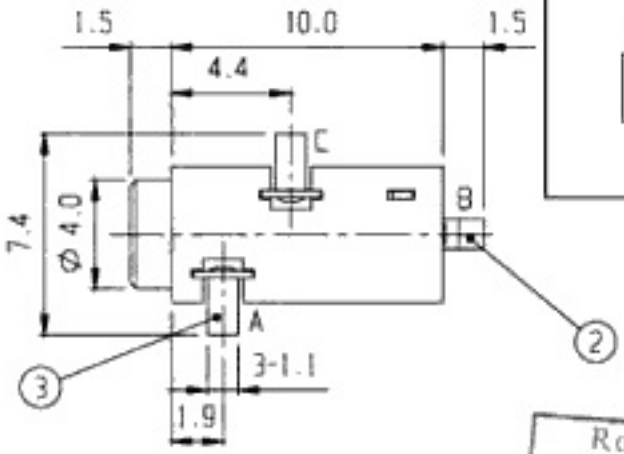

RoHS Compliance

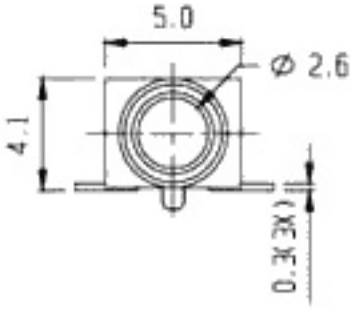

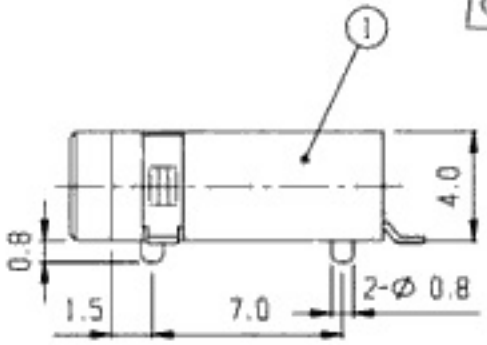

NO.	PART	MATERIAL	QTY	REMARKS	NO.	PART	MATERIAL	QTY	REMARKS
3	TERMINAL	P B S	2	Ag PLATED					
1	FRAME	NYLON 6T	1		2	TERMINAL	P B S	1	Ag PLATED

ISSUED	SPECIFICATION	TITLE: 2.5mm SMD STERED JACK			
	RATING: DC 30V 0.3A	MODEL NO: STM-25013A			
	CONTACT RESISTANCE: 50mΩ max.				
	INSULATION RESISTANCE: 100MΩ AT 500V DC	TOLERANCE	UNIT: MM	DWN.	
	WITESTAND VOLTAGE: AC 500V for 1 minute	UP TO 1.0:±0.1	SCALE: 4:1	CHK"D.	
	OPERATION FORCE: REFER ATTACH SPECIFICATION	1.0 TO 10.0:±0.2	VERSION: 03		
	SWITCHING LIFE: 5,000 cycles min.	OVER 10.0:±0.3	DRWG NO:	APPD.	