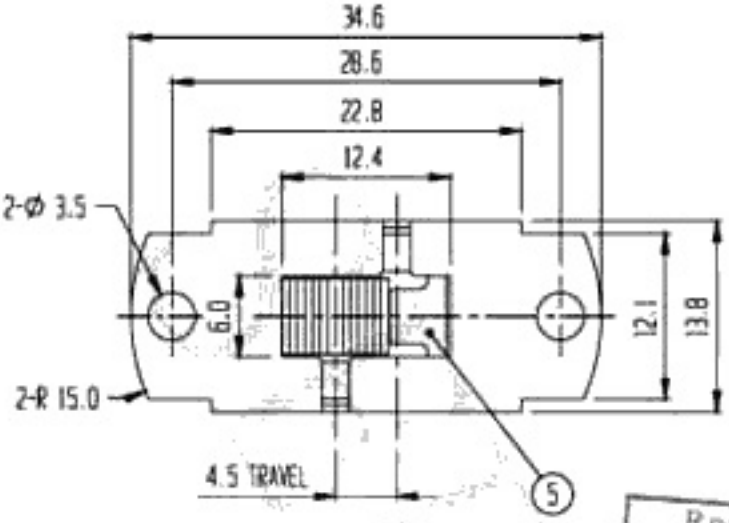

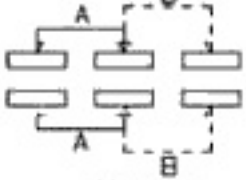

SCHEMATIC

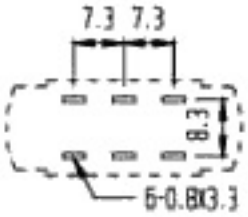

P.C.B. LAYOUT

RoHS Compliance

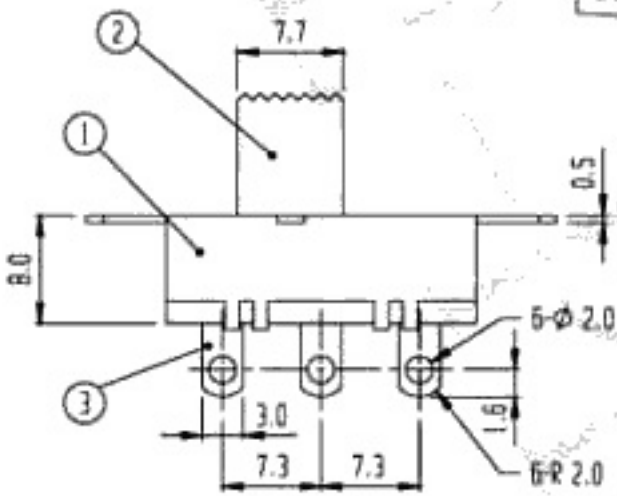

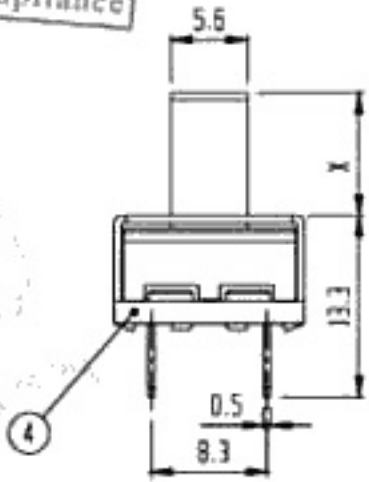

NO.	PART	MATERIAL	QTY	REMARKS	NO.	PART	MATERIAL	QTY	REMARKS
5	SPRING PLATE	P B S	3		6	CONTACT	Cu	2	Ag PLATED
3	TERMINAL	Cu	6	Ag PLATED	4	TERMINAL BASE	PHENOL RESIN	1	NATURAL
1	FRAME	SPCC	1	Ni PLATED	2	KNOB	P C	1	G 3-13

ISSUED	SPECIFICATION	TITLE: AC POWER SWITCH (2P2T)			
	RATING: 2.5A 250V AC/5A 125V AC	MODEL NO: ACS-22105-D-G( )			
	CONTACT RESISTANCE: 30mΩ max.				
	INSULATION RESISTANCE: 500MΩ AT 500V DC	TOLERANCE	UNIT: MM	DWN.	
	WITHSTAND VOLTAGE: AC 500V for 1 minute	UP TO 1.0:±0.1	SCALE: 2:1	CHK'D.	
	OPERATION FORCE: REFER ATTACH SPECIFICATION	1.0 TO 10.0:±0.2	VERSION: 03		
	SWITCHING LIFE: 10K cycles min.	OVER 10.0:±0.3	DRWG NO:	APPD.	